PLANT PALETTE:

TREES:		
WASHINGTONIA ROBUSTA MEXICAN FAN PALM	18'-26' TRUNK HT. SKINNED TRUNKS	8 TOTAL
DAHLBERGIA SISSOO SISSOO TREE	24" BOX MINIMUM 9' HT., 4.5' SPR, 11/4" CAL.	49 TOTAL
QUERCUS VIRGINIANA SOUTHERN LIVE OAK	36" BOX, MATCHING 10' HT., 8' SP., 2 1/2" CAL.	41 TOTAL
PROSOPIS CHILENSIS 'PHOENIX' THORNLESS MESQUITE	24" BOX, MATCHING 8' HT., 4' SP., 1 1/2" CAL.	56 TOTAL
CERCIDIUM FLORIDUM D.M. DESERT MUSEUM PALO VERDE	36" BOX MIN. 12' HT., 6' SPR, 21/2" CAL.	21 TOTAL
CHITALPA TASHKENSIS CHITALPA	24" BOX, MATCHING 7' HT., 4' SP., 1 1/4" CAL.	74 TOTAL
CAESALPINIA MEXICANA YELLOW MEXICAN BIRD OF PARADISE	15 GALLON MIN. TREE FORM (6' HT., 2 1/2' SP., 3/4" CAL.)	27 TOTAL
PHOENIX ROEBELLINI PIGMY DATE PALM	15 GALLON MIN. 2-3 TRUNK	18 TOTAL
SHRUBS & VINES:		
LEUCOPHYLLUM LANGMANIAE RIO BRAVO SAGE	5 GALLON FULL, PAST CAN	316 TOTAL
CARISSA GRANDIFLORA 'G.C.' GREEN CARPET	5 GALLON FULL, PAST CAN	95 TOTAL
RUELLIA BRITTONIANA CALIFORNICA RUELLIA	5 GALLON FULL, PAST CAN	64 TOTAL
NERIUM OLEANDER 'D.P.' DWARF PINK OLEANDER	5 GALLON FULL, PAST CAN	214 TOTAL
CALLISTEMON VIMINALIS 'LITTLE JOHN' LITTLE JOHN BOTTLE BRUSH	5 GALLON FULL, PAST CAN	199 TOTAL
CASSIA STURTII GREEN DESERT CASSIA	5 GALLON FULL, PAST CAN	106 TOTAL
TECOMA STANS V. STANS YELLOW BELLS	5 GALLON FULL, PAST CAN	51 TOTAL
LEUCOPHYLLUM LAEVIGATUM CHIHUAHUAN SAGE	5 GALLON FULL, PAST CAN	71 TOTAL
CAESALPINIA PULCHERRIMA RED BIRD OF PARADISE	5 GALLON FULL, PAST CAN	51 TOTAL
MUHLENBERGIA CAPILLARIS 'REGAL MIST' PINK MUHLY	5 GALLON FULL, PAST CAN	40 TOTAL
GROUNDCOVERS AND ACCENTS:		
ACACIA REDOLENS 'D.C.' DESERT CARPET REDOLENS	5 GALLON FULL, PAST CAN	289 TOTAL
LANTANA MONTIVIDENSIS 'N.G.' NEW GOLD LANTANA	1 GALLON FULL, PAST CAN	369 TOTAL
EREMOPHYLLA MINGINEW GOLD OUTBACK SUNRISE	1 GALLON FULL, PAST CAN	334 TOTAL
PARVIFOLIA HESPERALOE RED YUCCA	5 GALLON FULL, PAST CAN	41 TOTAL
SYNTHETIC TURF		100 S.F.

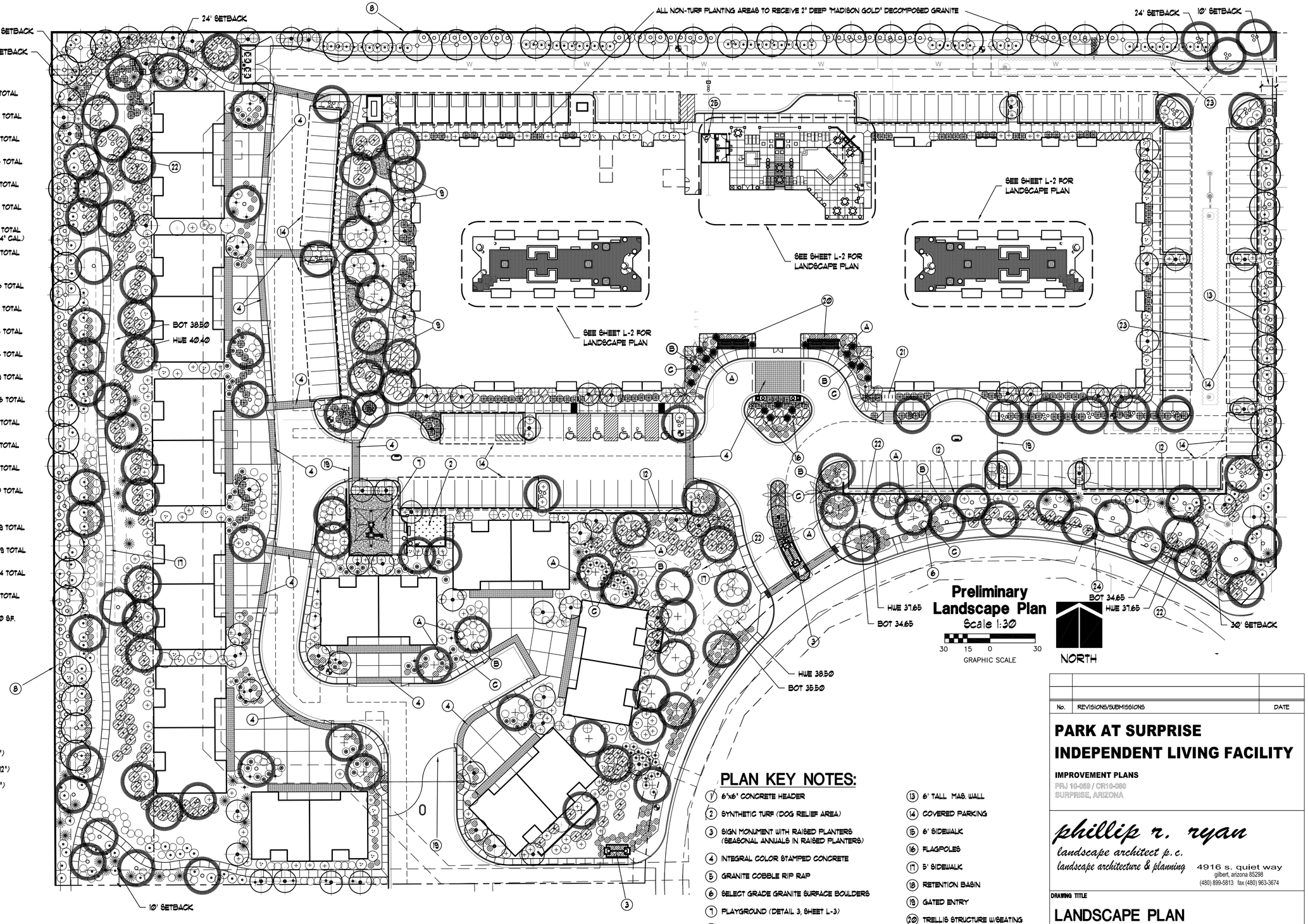

BOULDER SCHEDULE:

- (A) 4'x4'x3' DEEP SELECT GRADE GRANITE SURFACE BOULDER (BURY 12")
- (B) 3'x3'x30" DEEP SELECT GRADE GRANITE SURFACE BOULDER (BURY 12")
- (C) 2'x2'x18" DEEP SELECT GRADE GRANITE SURFACE BOULDER (BURY 6")

NOTE: BOULDER COLOR TO BE SIMILAR TO DECOMPOSED GRANITE.

CONSTRUCTION NOTE:

A. SISSOO TREES PLANTED CLOSER THAN 10' FROM A STRUCTURE, WALL, SIDEWALK OR CURB SHALL HAVE A DEEP ROOT BARRIER INSTALLED.

PLAN KEY NOTES:

1. 6"x6" CONCRETE HEADER
2. SYNTHETIC TURF (DOG RELIEF AREA)
3. SIGN MONUMENT WITH RAISED PLANTERS (SEASONAL ANNUALS IN RAISED PLANTERS)
4. INTEGRAL COLOR STAMPED CONCRETE
5. GRANITE COBBLE RIP RAP
6. SELECT GRADE GRANITE SURFACE BOULDERS
7. PLAYGROUND (DETAIL 3, SHEET L-3)
8. EXISTING MASONRY WALL
9. LIFETRAIL ACTIITY PANELS, DET 2, SHT. L-3
10. 3'-6" DIA. HAND-PLACED GRANITE COBBLE
11. POOL
12. 36" DECORATIVE SCREEN WALL
13. 6' TALL MAS. WALL
14. COVERED PARKING
15. 6' SIDEWALK
16. FLAGPOLES
17. 5' SIDEWALK
18. RETENTION BASIN
19. GATED ENTRY
20. TRELLIS STRUCTURE W/SEATING
21. BIKE PARKING
22. RETENTION BASIN
23. BELOW-GRADE STORM WATER TANK
24. 1" IRRIGATION WATER METER
25. IRRIGATION CONTROLLER

No.	REVISIONS/SUBMISSIONS	DATE

PARK AT SURPRISE INDEPENDENT LIVING FACILITY

IMPROVEMENT PLANS

PRJ 10-059 / CR10-060
SURPRISE, ARIZONA

phillip r. ryan
landscape architect p.c.
landscape architecture & planning
4916 s. quiet way
gilbert, arizona 85296
(480) 899-5813 fax (480) 963-3674

DRAWING TITLE

LANDSCAPE PLAN

REGISTERED LANDSCAPE ARCHITECT
CERTIFICATE NO. 1489
PHILLIP R. RYAN
Date Signed
ARIZONA, U.S.A.
Expires 03/31/18

DESIGNED BY: PRR	PROJECT NO.
DRAWN BY: DLR	SCALE:
CHECKED BY: PRR	DRAWING NO.
DATE: 6/1/16	L-1
DATA FILE:	

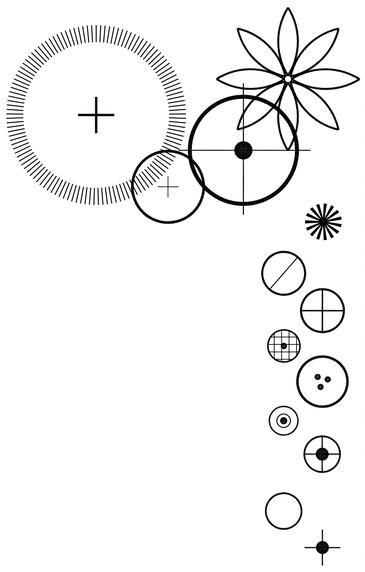

PLANT PALETTE: (FOR THIS SHEET ONLY)

TREES:	
WASHINGTONIA ROBUSTA MEXICAN FAN PALM	20' TRUNK SKINNED TRUNKS
PYRUS CALLERYANA BRADFORD PEAR	36" BOX, MATCHING 12' HT., 8' SP., 2 1/2" CAL.
LIGUSTRUM JAPONICUM "TEXANUM" TEXAS PRIVET	24" BOX, MATCHING 7' HT., 4' SP., 1 1/4" CAL.
PRUNUS CERRASIFERA PURPLE LEAF PLUM	24" BOX MINIMUM
PHOENIX ROEBELLINI PIGMY DATE PALM	15 GALLON MIN. 2-3 TRUNK
SHRUBS & VINES:	
CARISSA GRANDIFLORA 'G.C.' GREEN CARPET	5 GALLON FULL, PAST CAN
RUELLIA BRITTONIANA CALIFORNICA RUELLIA	5 GALLON FULL, PAST CAN
CALLISTEMON VIMINALIS 'LITTLE JOHN' LITTLE JOHN BOTTLE BRUSH	5 GALLON FULL, PAST CAN
TECOMA STANS V. STANS YELLOW BELLS	5 GALLON FULL, PAST CAN
HIBISCUS CH. 'ORANGE' ORANGE HIBISCUS	5 GALLON FULL, PAST CAN
PITTOSPORUM TOBIRA 'WHEELERS DWARF' WHEELERS DWARF PITTOSPORUM	5 GALLON FULL, PAST CAN
GROUNDCOVERS AND ACCENTS:	
EREMOPHYLLA MINGINEW GOLD OUTBACK SUNRISE	1 GALLON FULL, PAST CAN
MORAEA IRIDIOIDES FORTNIGHT LILLY	5 GALLON FULL, PAST CAN

BOULDER SCHEDULE:

(A) 4'x4'x3' DEEP SELECT GRADE GRANITE SURFACE BOULDER (BURY 12")

(B) 3'x3'x30" DEEP SELECT GRADE GRANITE SURFACE BOULDER (BURY 12")

(C) 2'x2'x18" DEEP SELECT GRADE GRANITE SURFACE BOULDER (BURY 6")

NOTE: BOULDER COLOR TO BE SIMILAR TO DECOMPOSED GRANITE.

PLAN KEY NOTES: (FOR THIS SHEET ONLY)

1. INTEGRAL COLOR STAMPED CONCRETE
2. 5' SQ. TREE GRATE (ADA)
3. SEASONAL ANNUALS FROM 4" POTS @ 6" O.C. SPACING OR VEGETABLES PLANTED BY TENANTS
4. GARDEN BOX, DETAIL 3, SHEET L-5
5. INTEGRAL COLOR CONCRETE BAND
6. FIRE PIT
7. COLUMNS & METAL LATTICE, DETAIL 6, SHEET L-4
8. JACUZZI (ADA)
9. DECORATIVE MASONRY COLUMN, DETAIL 3, SHEET L-4
10. CONCRETE PLANTER POT
11. POOL
12. 6' BENCH, DETAIL 4, SHEET 4
13. 6' TALL DECORATIVE W.I. FENCE, DETAIL 3, SHEET L-4
14. GAS B-B-Q, DETAIL 2, SHEET L-4
15. DECORATIVE COLUMN
16. SELF CLOSING/SELF LATCHING GATE, DETAIL 3, SHEET L-4
17. ACRYLIC DECK
18. CLOTH SHADE CANOPY
19. POOL FURNITURE (BY OWNER)
20. PRIVATE PAVED PATIO

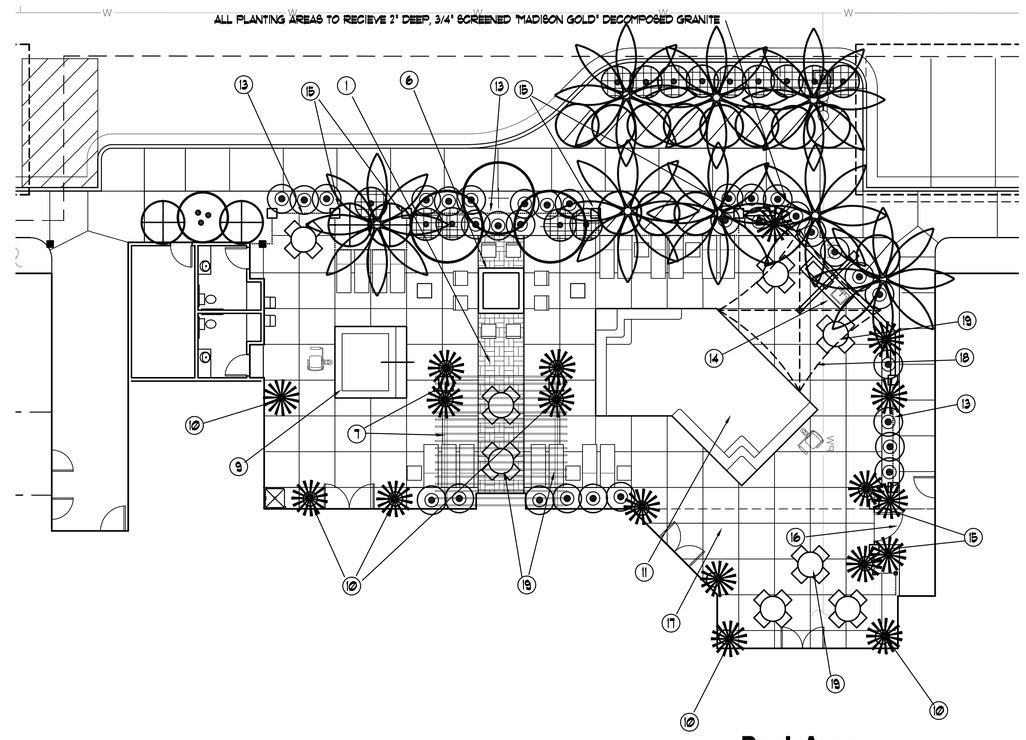

Pool Area
Landscape Plan
Scale 1:10

10 5 0 10
GRAPHIC SCALE

NORTH

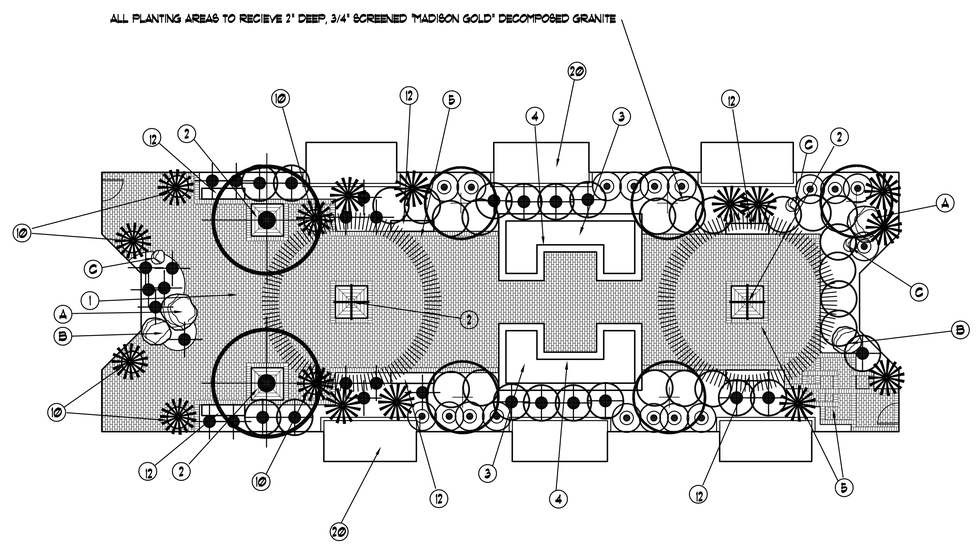

Interior Courtyard
Landscape Plan
Scale 1:10

10 5 0 10
GRAPHIC SCALE

NORTH

No.	REVISIONS/SUBMISSIONS	DATE

PARK AT SURPRISE INDEPENDENT LIVING FACILITY

IMPROVEMENT PLANS

PRJ 10-059 / CR10-060
SURPRISE, ARIZONA

phillip r. ryan
landscape architect p.c.
landscape architecture & planning
4916 s. quiet way
gilbert, arizona 85298
(480) 899-5813 fax (480) 963-3674

DRAWING TITLE

LANDSCAPE PLAN

REGISTERED LANDSCAPE ARCHITECT CERTIFICATE NO. 14897 PHILLIP R. RYAN Date Signed ARIZONA, U.S.A. Expires 03/31/13

DESIGNED BY: PRR	PROJECT NO.
DRAWN BY: DLR	SCALE:
CHECKED BY: PRR	DRAWING NO.
DATE: 6/1/16	L-2
DATA FILE:	

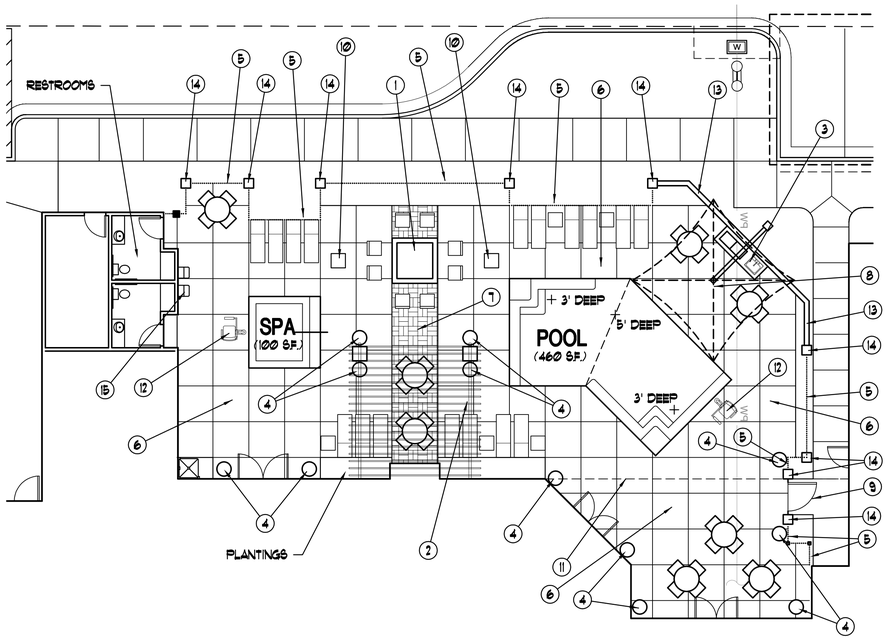

PLAN KEY NOTES:

1. FIRE PIT
2. TRELLIS SHADE STRUCTURE, DETAIL 6/4
3. B-B-Q W/ SINK & COUNTERTOP, DETAIL 2/4
4. POTTED PLANTS
5. 5' HIGH STEEL TUBE FENCE, DETAIL 3/4
6. ACRYLIC "KOOLDECK" SURFACE W/ SCORING @ 5' O.C. EA. WAY
7. STAMPED COLORED CONCRETE
8. 16' SQ. CANTILEVERED CANVAS AWNING
9. GATED ENTRY, DETAIL 3/4
10. 2' SQ. PLANTER W/ DATE PALM
11. ROOF OVERHANG
12. ADA COMPLIANT LIFT CHAIR
13. 6' HIGH MASONRY WALL
14. 1'-4" SQ. CMU DECORATIVE COLUMN, DETAIL 3/4
15. DRINKING FOUNTAINS

1/3 POOL AREA PLAN
SCALE 1:10 NORTH

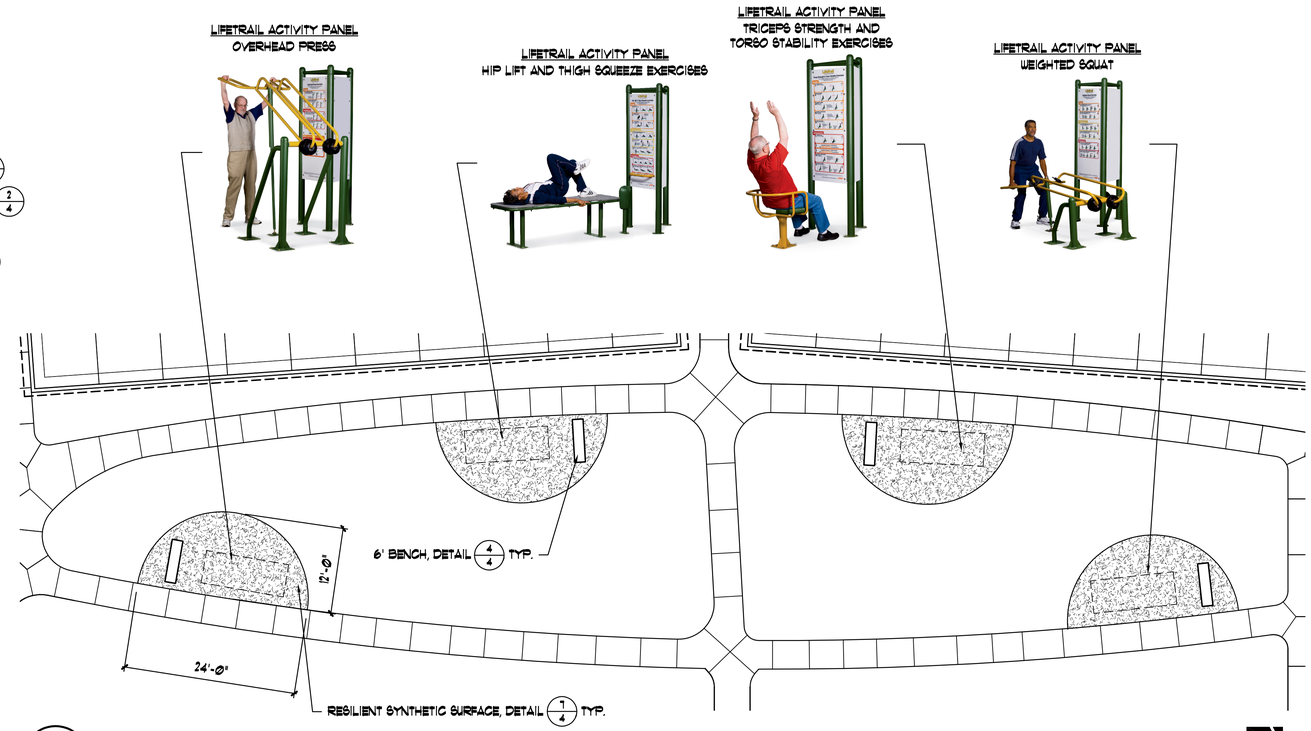

2/3 FITNESS AREA LAYOUT PLAN
SCALE 1:10 NORTH

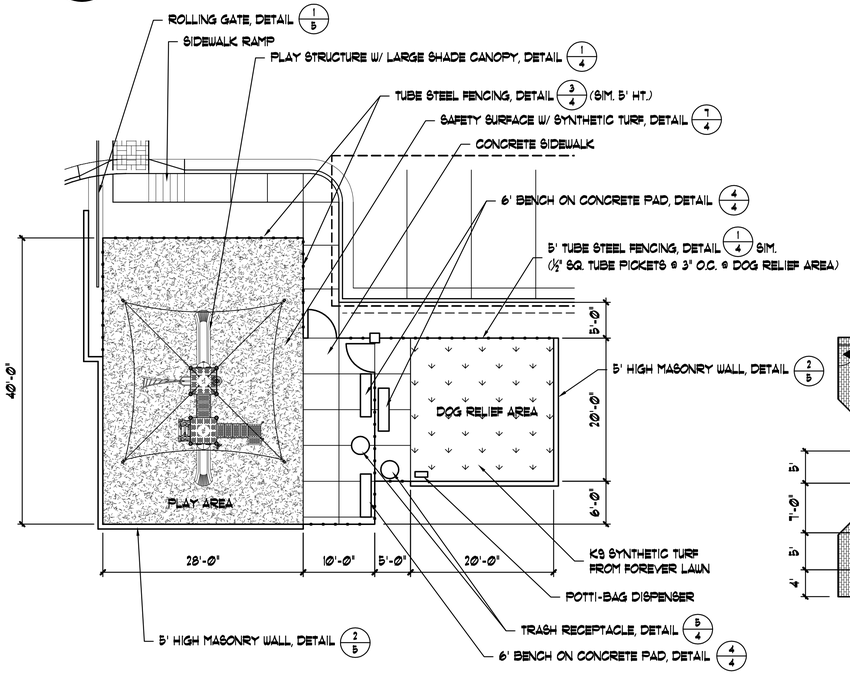

3/3 PLAY AREA & DOG RELIEF AREA LAYOUT PLAN
SCALE 1:10 NORTH

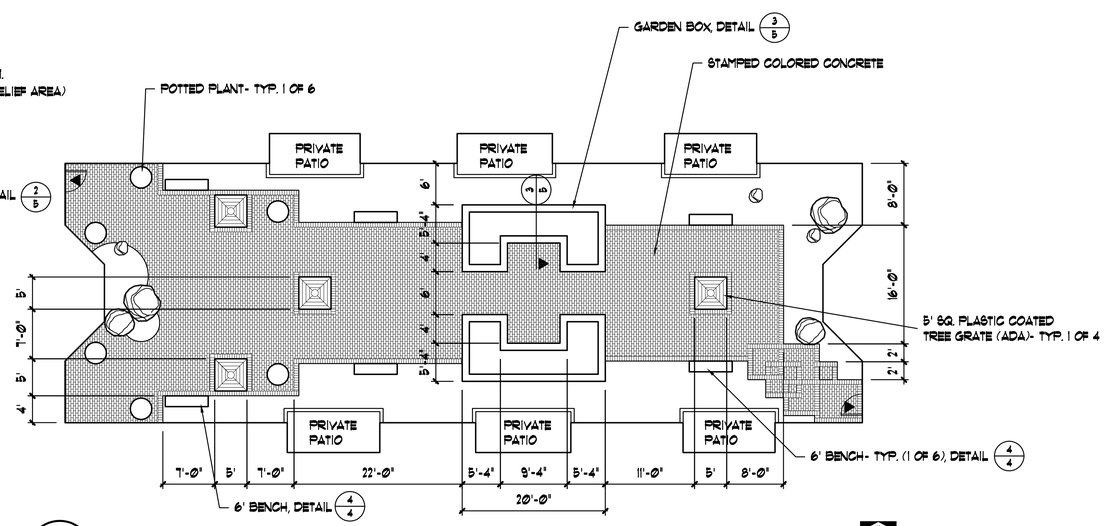

4/3 INTERIOR COURTYARD LAYOUT PLAN
NOT TO SCALE NORTH

No.	REVISIONS/SUBMISSIONS	DATE

PARK AT SURPRISE
INDEPENDENT LIVING FACILITY

IMPROVEMENT PLANS
PRJ 10-059 / CR10-060
SURPRISE, ARIZONA

phillip r. ryan
landscape architect p.c.
landscape architecture & planning
4916 s. quiet way
gilbert, arizona 85298
(480) 899-5813 fax (480) 963-3674

DRAWING TITLE
LAYOUT PLANS

REGISTERED LANDSCAPE ARCHITECT
CERTIFICATE NO. 14891
PHILLIP R. RYAN
Date Signed
ARIZONA, U.S.A.
Expires 03/31/19

DESIGNED BY: PRR	PROJECT NO.
DRAWN BY: DLR	SCALE:
CHECKED BY: PRR	DRAWING NO.
DATE: 6/1/16	L-3
DATA FILE:	

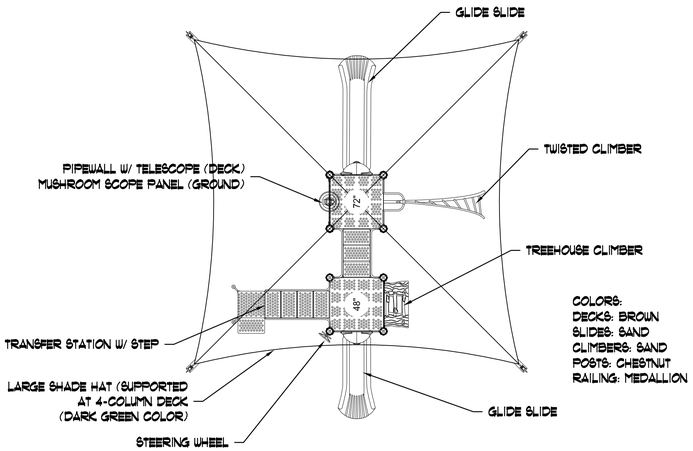

1/4 **PLAY STRUCTURE**

SCALE 1/4" = 1'-0"

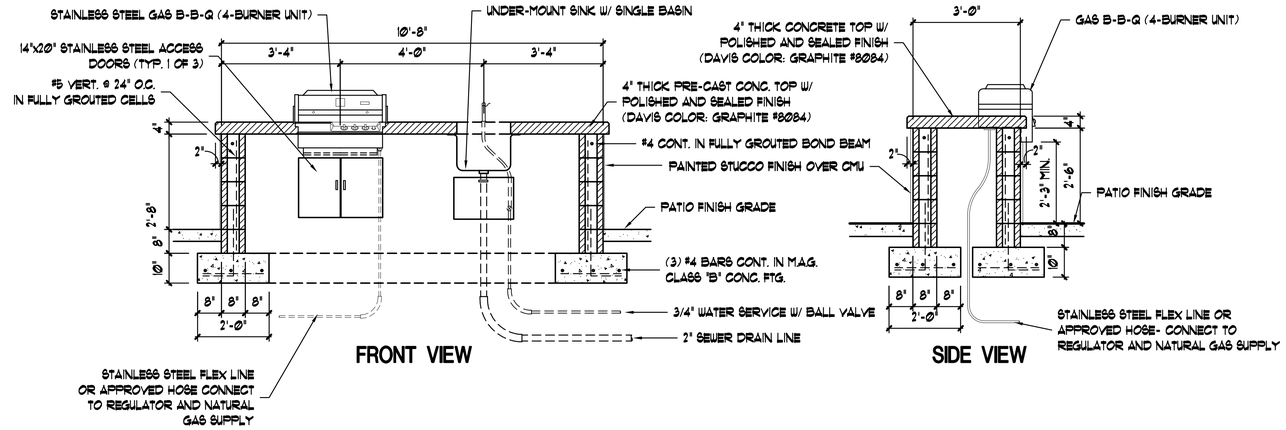

(NOTE: ALL PAINTED STUCCO TO BE MODERATE WHITE- SW6140)

2/4 **GAS B-B-Q**

SCALE 1:10

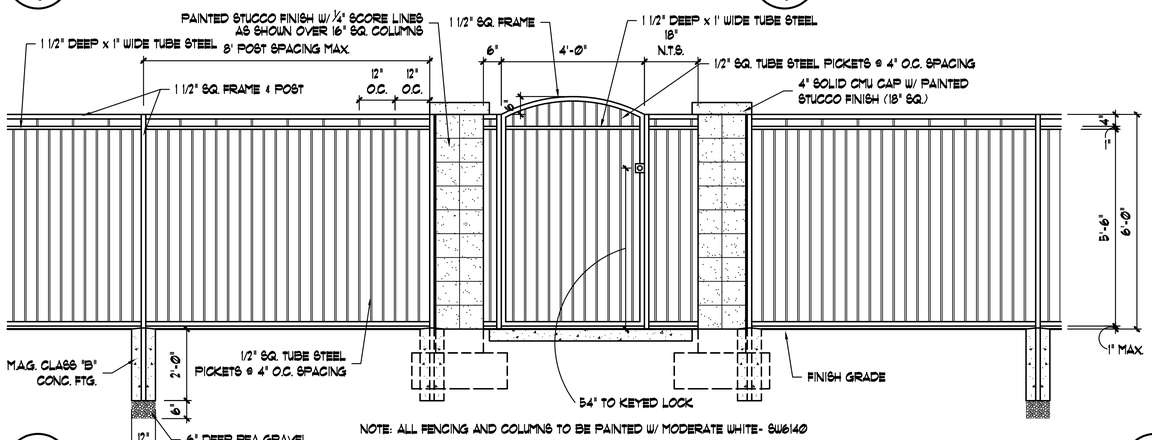

3/4 **POOL FENCE, POOL GATE & COLUMN ELEVATION**

SCALE 1/2" = 1'-0"

WABASH VALLEY MANUFACTURING
URBANSCAPES- CAMDEN BENCHES
MODEL CA1121
(FAUX WOOD, IN-GROUND, HAZELNUT METAL COLOR)

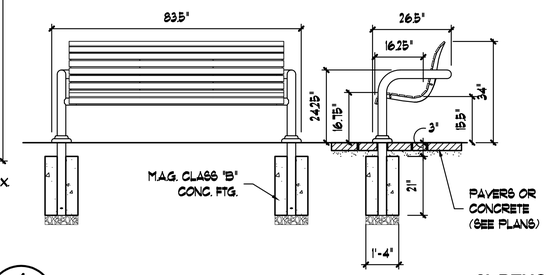

4/4 **6' BENCH**

N.T.S.

WABASH VALLEY MANUFACTURING
URBANSCAPES
MODEL TJ3F33P W/ LID
COLOR: HAZELNUT

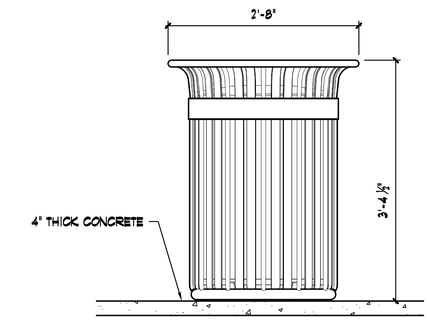

5/4 **TRASH RECEPTACLE**

N.T.S.

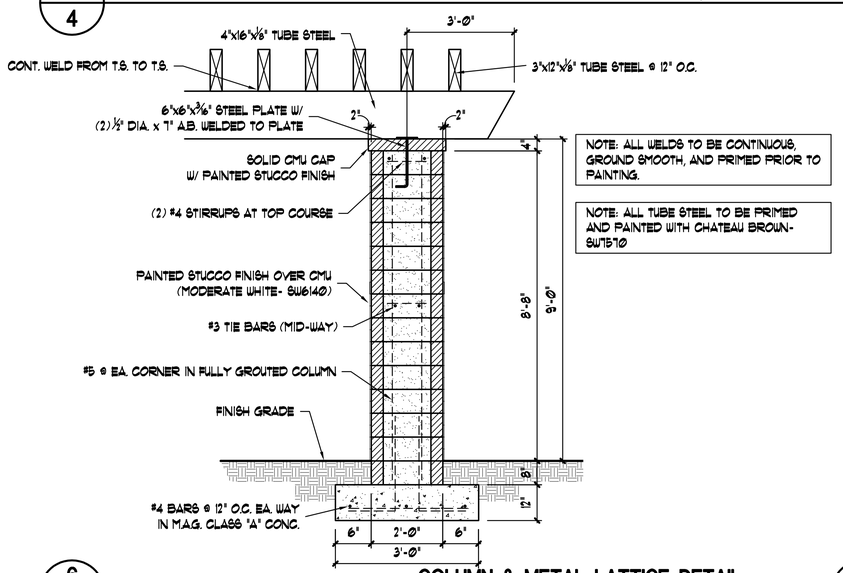

NOTE: ALL WELDS TO BE CONTINUOUS, GROUND SMOOTH, AND PRIMED PRIOR TO PAINTING.

NOTE: ALL TUBE STEEL TO BE PRIMED AND PAINTED WITH CHATEAU BROWN- SW7570

6/4 **COLUMN & METAL LATTICE DETAIL**

SCALE 1/2" = 1'-0"

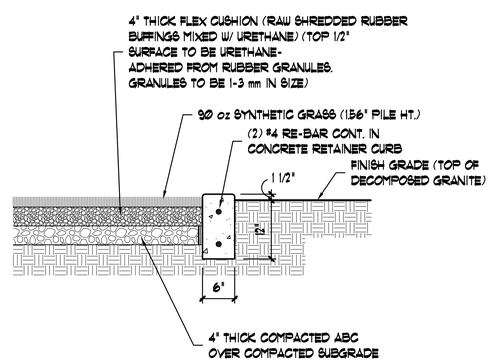

7/4 **SAFETY SURFACE W/ SYNTHETIC TURF**

N.T.S.

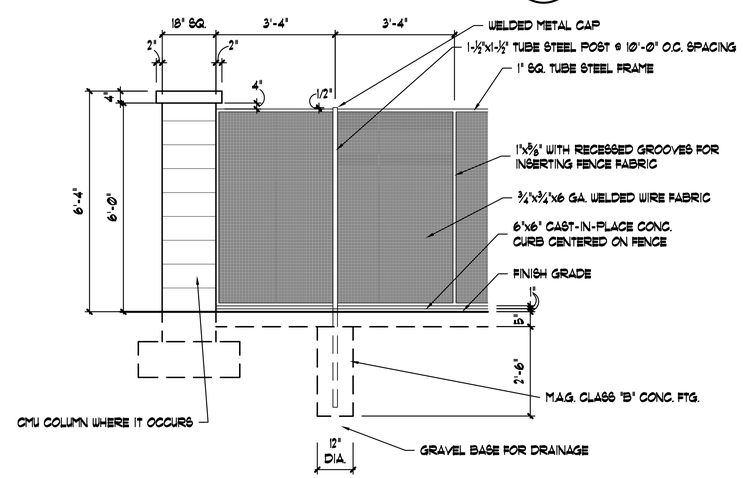

NOTE: ALL METAL TO BE PRIMED AND PAINTED W/ SHERWIN WILLIAMS- MODERATE WHITE (SW6140)

8/4 **DOG RELIEF AREA FENCE**

SCALE 1/2" = 1'-0"

No.	REVISIONS/SUBMISSIONS	DATE

PARK AT SURPRISE INDEPENDENT LIVING FACILITY

IMPROVEMENT PLANS

PRJ 10-059 / CR10-060
SURPRISE, ARIZONA

phillip r. ryan
landscape architect p.c.
landscape architecture & planning
4916 s. quiet way
gilbert, arizona 85298
(480) 899-5813 fax (480) 963-3674

DRAWING TITLE

DETAILS

REGISTERED LANDSCAPE ARCHITECT CERTIFICATE NO. 46931 PHILLIP R. RYAN ARIZONA, U.S.A. Expires 03/31/16

DESIGNED BY: PRR	PROJECT NO.
DRAWN BY: DLR	SCALE:
CHECKED BY: PRR	DRAWING NO.
DATE: 6/1/16	L-4
DATA FILE:	

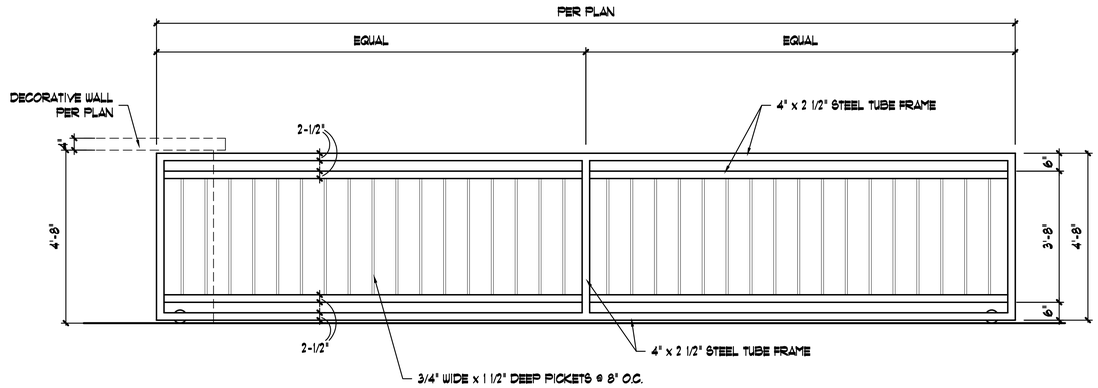

1/5 (NOTE: ALL METAL FENCING TO BE PAINTED MODERATE WHITE- SW6140)

VEHICULAR GATE ELEVATION

SCALE 1/2" = 1'-0"

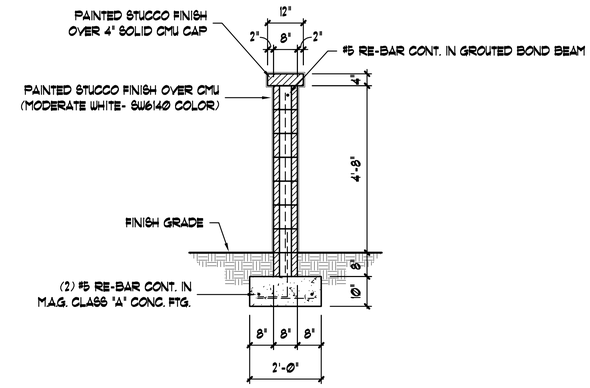

2/5

5' HIGH DECORATIVE SITE WALL

SCALE 1/2" = 1'-0"

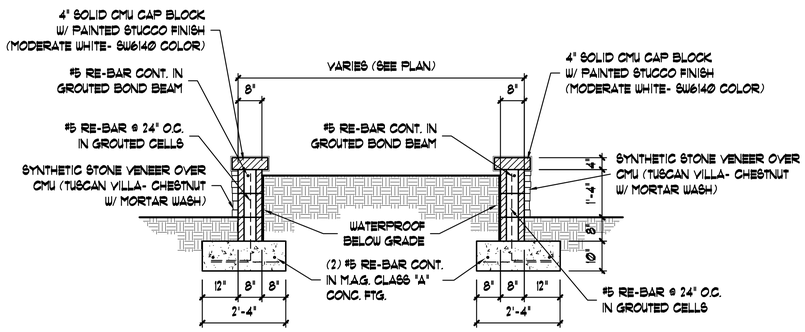

3/5

GARDEN BOX RAISED PLANTER

SCALE 1/2" = 1'-0"

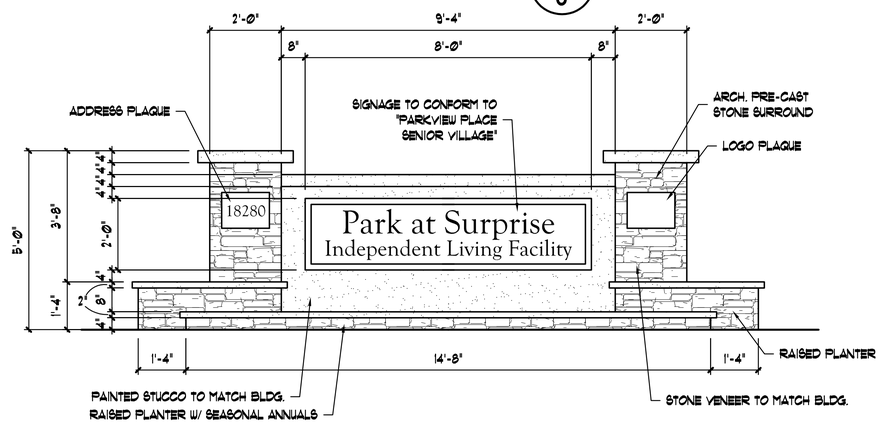

4/5

ELEVATION

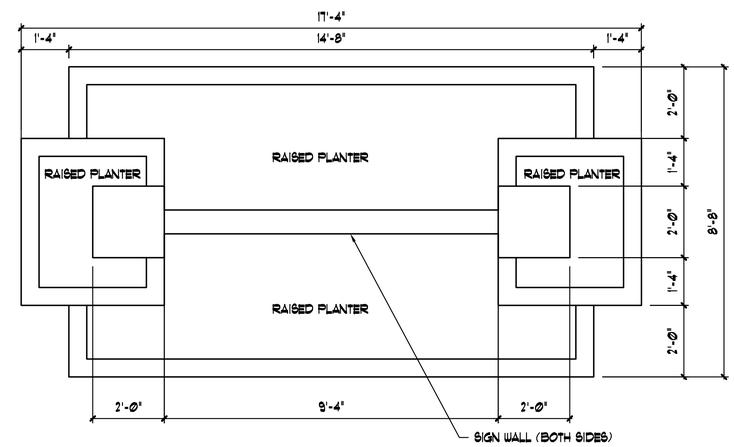

PLAN VIEW

SIGN MONUMENT DETAIL

SCALE 1/2" = 1'-0"

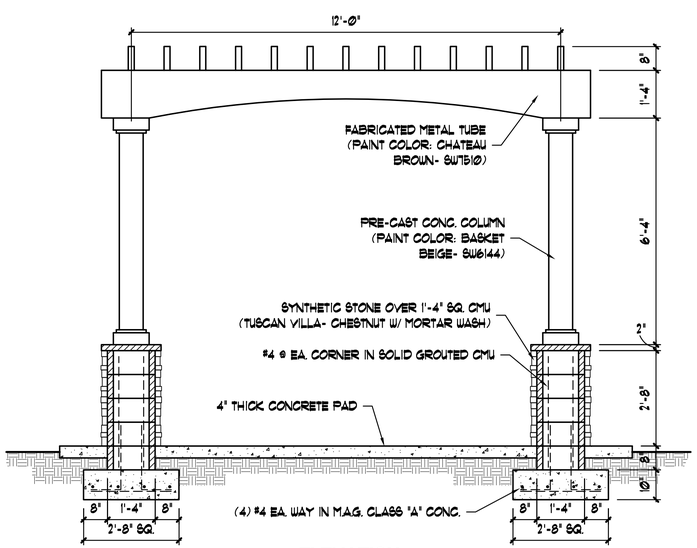

ELEVATION

SCALE 1/2" = 1'-0"

5/5

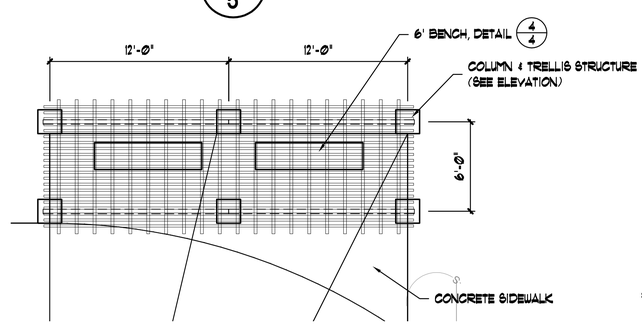

PLAN VIEW

NOT TO SCALE

TRELLIS W/ SEATING

SCALE AS NOTED

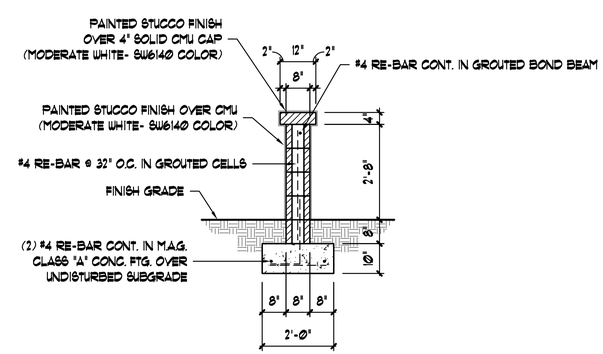

6/5

DECORATIVE SCREEN WALL SECTION

NOT TO SCALE

No.	REVISIONS/SUBMISSIONS	DATE

PARK AT SURPRISE INDEPENDENT LIVING FACILITY

IMPROVEMENT PLANS

PRJ 10-059 / CR10-060
SURPRISE, ARIZONA

phillip r. ryan
landscape architect p.c.
landscape architecture & planning
4916 s. quiet way
gilbert, arizona 85298
(480) 899-5813 fax (480) 963-3674

DRAWING TITLE

DETAILS

REGISTERED LANDSCAPE ARCHITECT CERTIFICATE NO. 48618 PHILLIP R. RYAN Date Signed 6/1/16 ARIZONA, U.S.A. Expires 03/31/18

DESIGNED BY: PRR	PROJECT NO.
DRAWN BY: DLR	SCALE:
CHECKED BY: PRR	DRAWING NO.
DATE: 6/1/16	L-5
DATA FILE:	